Follow Me

PROJECT PLAN

Team #29
Vishal Mahulkar
Chinmay Hegde
Justin Wheeler
Yifan Lu
Zhize Ma
Junho Chun
Sang Uk Park
Brad Stiff
Email: sdmay18-29@iastate.edu
Website: sdmay18-29.sd.ece.iastate.edu

Revised: 9/22/17 - v1

Table of Contents

List of Figures

Color	Pin	Line	Function	Description
Green	1	3	Power/Input	12V DC camera Power/Non-insolated input
Black	2	0	Opto Input 1	Opto-isolated input
Red	3	2	NC/+3.3V/GPIO	3.3V output.Current 120mA(nominal)
White	4	1	Opto Output 1	Opto-isolated output
Blue	5	N/A	Opto GND	Ground for opto-isolated I/O
Brown	6	N/A	GND	DC camera power ground

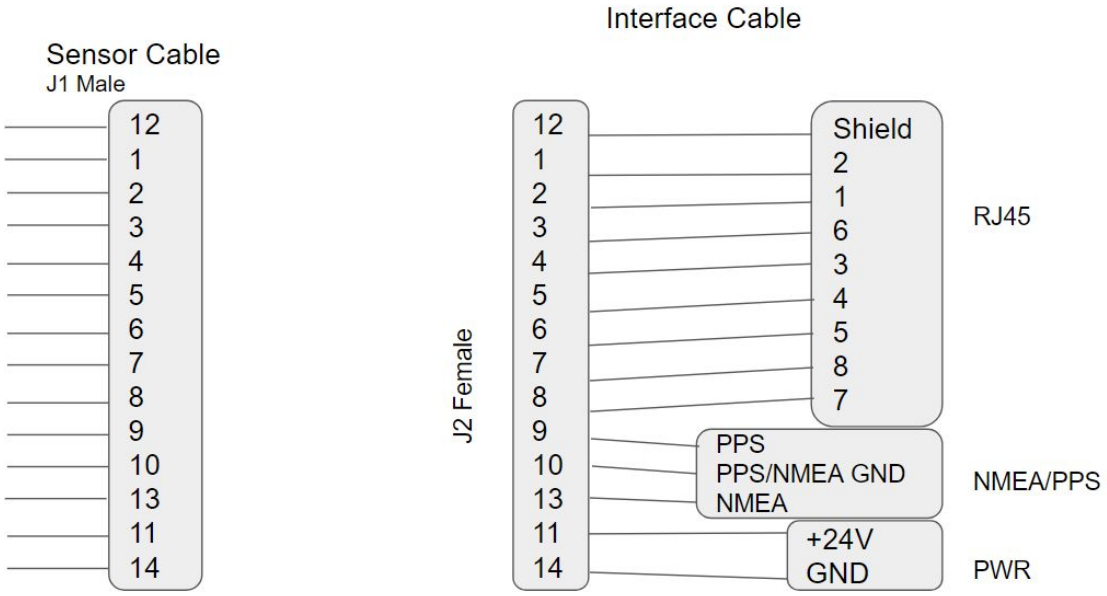

1	2	3	4	5	6	7	8	9	10	11	12	13	14
Orange	White	Green	Yellow	Blue	Clear	Brown	Light Blue	Violet	Tan or Pink	Red	Bare	Gray	Black

Power supply	24VDC/1.5A(max)
Protection	Short Circuit/Over Current/Over Voltage
Ripple	1-2%Vpp

Pin Number	Singal	Port Color
1	**Battery (+24V)**	**Red**
2	**USB D+ (Green Wire)**	**Green (USB)**

3	USB D- (White Wire)	White (USB)
4	Ground	Black
5	USB Ground (Black Wire)	Black (USB)
6	PRVCANL	Green
7	Ignition (+24V)	White
8	USB +5V (Red Wire)	Red (USB)
9	VEHCAN L	Blue
10	VEHCAN H	Brown
11	VEHCAN Shield	
12	PRVCANH	Orange

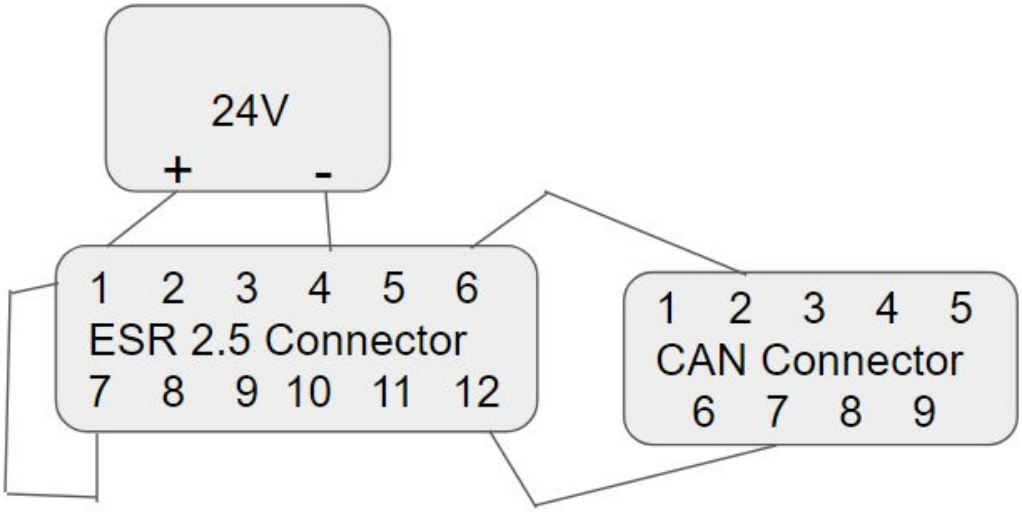

ESR Features

The ESR has features that will allow it to be integrated with other devices. Such features that we must keep in mind are the following:

- Enhances the ease for driving and gives information of general surrounding
- Reduces the chance of a potential collision which can cause an accident or injury and helps avoid property damage if such occur
- Brake support allows the previous mishaps which will come in use when it needs to come to an abrupt stop
- Gives information of distance between obstacles and other on-road vehicles and also notifies the driver is such situations occur.

List of Definitions

Power supply
    24VDC
    1.5A(max)
    Protection
        Short Circuit
        Over Current
        Over Voltage
    Ripple
        1-2%Vpp

Use Quanergy Processing Unit (QPU)
-pre configured at the factory as a complete solution that includes necessary source code, library, and third party applications.

We need also(to make it work)
Power Source
    To power the sensor, we need to do this efficiently and take the other sensors into account.(mobile battery required for all the sensors)
Mouse+keyboard+Monitor
    Support computing environment.
Mounting surface
    Affix the sensor(I believe the Mechanical team will probably handle this)
Ethernet switch + Power adaptor
    To handle multiple sensors, Netgear ProSafe GS108 recommended
GPS/IMU module

Report position and supply the NMEA/PPS timing signals(OXTS RT3003 and VectorNav200 are supported by Quanergy)

Lidar has multiple returns(3)

Maximum, Second Strongest, and Last

Need to connect sensor to Ubunta Host computer

Page 26 really talks about the process in how to connect it

Laser Firing:

Sensor spins at 10Hz

Lasers fire at 53,828Hz

They fire at 8 different angles

(+3.2 to -18.25 degrees)

1 Introductory Material

1.1 Acknowledgement

We would like to appreciate Vishaal Mahulkar and his company for sponsoring our senior design team and providing the sensors for the project. We also want to thank Professor Chinmay Hegde for being our faculty advisor. We would also like to thank Iowa State's robotics and control's team for corporation to make the final product.

1.2 problem Statement (2 paragraphs+)

Recently, there are more and more traffic incidents occurring due to careless driving. It can be avoidable factors such as Texting while driving and driving after being drunk. It can be also from unintentional factors such as late night driving while being sleepy. All these are positioning huge threats to our lives. Therefore, our project is designed to avoid these kinds of issues so that people can drive safely and don't have to worry about these factors.

The general solution approach is to design a car that has the ability to drive on its own, without any human interference. We will be mounting all sorts of sensors on the vehicle and have a "brain" to control the car depending on the feedbacks produced by sensors. We will be working with a mechanical, control and robotics team from ISU to have the final product delivered.

1.3 Operating Environment (one paragraph +)

Don't know that yet. Will be updated soon.

1.4 Intended Users and Intended uses (two paragraph +)

– To properly design an end product that will provide the maximum satisfaction and perform in the most efficient manner, it is essential to understand the end user and the associated end uses.

The final product should be open to any driver in the world. The vehicle would be using on actual road for actual driving. It can be used for both personal purposes and commercial.

1.5 Assumptions and Limitations

- For safety concern, there should be a limit speed of following car.
- There is a certain distance the data could receive from the lead car to follow car.

– The traffic signs and road signs that sensor cannot recognize.

– The max distance the sensor can detect and recognize people, car and sign.

1.6 Expected End Product and other Deliverables

At end of project, our product should has following function:

– The follow car could drive completely automatically. The car could operate the gas, brake and steering wheel by its system.

– The follow car can receive the exact location data in from the lead car. The follow car will drive with same track of lead car.

– The follow car could detect and recognize the pedestrian, car, truck and curb by the sensor of lidar, radar and camera.

– The system can process all the data from GPS and sensors. According to the data, the car can judge the drive environment and determine how to operate the car by the system.

2 Proposed Approach and Statement of Work

2.1 Functional requirements

The requirements for our project are:

1. To be able to send the location of a lead vehicle to a following vehicle. This means that we need to come up with a way to let the following vehicle know where it needs to get to.
2. To be able to communicate sensor information to ROS. For this part we need to be able to receive data from all the sensors and have it packaged in a way that the controls and robotics team can use.
3. To be able to communicate this information to the other teams and required destinations. This means to be able to receive and send the data we get in the right format.

2.2 Constraints considerations

List and explain the constraints and non-functional requirements of the project. This is where you would enlist non-technical requirements. This may still be a fundamental deliverable that your client needs at the end of the semester.

Discuss the standard protocols that you follow in your lab or for writing code. Are these approved by standard organizations like IEEE, ABET etc. Will any of your practices be considered unethical by such organizations? Discuss how standards are applicable to your project.

We have not agreed on any non-technical constraints with our client.

2.3 Technology considerations

For the method of communicating between a lead and following vehicle we have the ability to choose any way we choose to. This can be a great strength as we have some ideas. We do have several sensors from which to work from. We are constrained to working with the radar, gps, Lidar, and camera we are given. We are also constrained to using Ubuntu and the ROS for our project.

We are have not looked at the options for communicating between the lead and following vehicle just yet.

2.4 Safety considerations

Since we will be working with two large golf carts in this project we need to test many times before actually testing on the cars in a driveway. We will have to make sure first that all the information is going where it needs to go and guarantee almost no chance for errors.

2.5 Previous Work and Literature

We have not looked at any previous related work.

2.6 Possible Risks and risk management

We are doing this project with four other groups. Each one is emphasizing on a specific role. Some of the things that may slow down our work is communication between all the groups. We need to specify all the safety details, as well as the hardware necessities to make sure all the equipment works when put together. We are sharing all our work with the other groups online. This should allow all the groups to be on the same page and allow smoother roads to a completion of the project.

2.7 Project Proposed Milestones and evaluation criteria

The following are our Project Milestones

Milestone 1: 2~3 weeks (Early October)

- Know how each component works
- Figure out all necessary hardware
- Understand the hardware and begin getting data for both the hardware and software
- Understand ROS
- Install on top of Ubuntu

Milestone 2: 1 month (Early November)

- Have communication between the teams (Robotics + Controls)
- Know how to format the raw data through ROS
- Format received input data
- Use the received data to control the car

Milestone 3: Before Dead Week (12/1/17)

- Test all inputs and see if they are functioning properly
- Do some cornercase testing

Testing will be done throughout each milestone before we can move on to the following objectives.

2.8 Project tracking procedures

In order to track progress we will have a general group meeting each week. There we will talk about all the progress we have made as a group. We will also show the individual work we have done to the whole group. This will all be compiled into a report which will specify all the progress that we have made in that week.

2.9 Objective of the task

Our objective is to have a working autonomous vehicle. This autonomous vehicle must be able to avoid obstacles on the road. It must also be able to receive the location of another vehicle and be able to drive to/ follow the said vehicle.

2.10 Task approach

We plan on understanding the software and software first. Then we will combine them to read input from the sensors. We will receive feedback from the Robotics and Controls teams to send and receive data from them. We will use this data to control the car. We will do continual testing first without the car and later with the car until we have a final system that works.

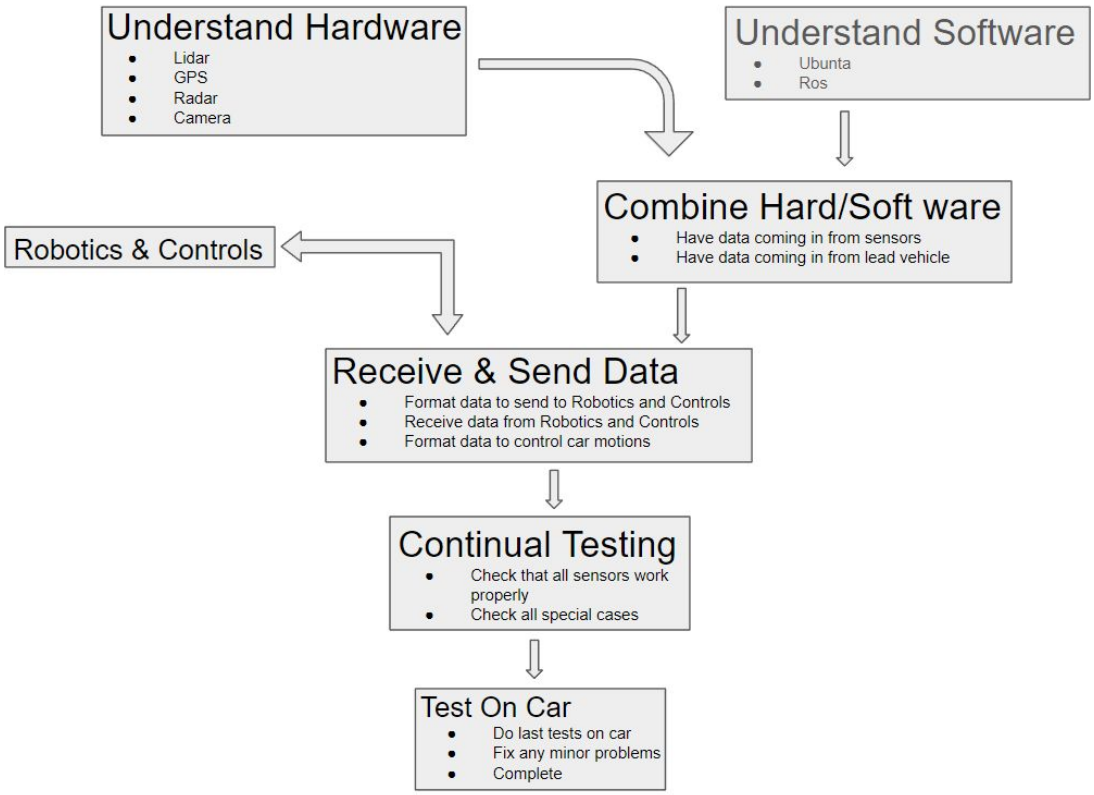

2.11 Expected Results and Validation

The desired outcome is a totally autonomous vehicle with collision avoidance. In order to confirm this we will test first in a parking lot with simulated obstacles. Then we will get the vehicle on an actual road for testing after many different scenarios have been tested.

3 Estimated Resources and Project Timeline

3.1 Personnel effort requirements

Include a detailed estimate in the form of a table accompanied by a textual reference and explanation. This estimate shall be done on a task-by-task basis and should be based on the projected effort required to perform the task correctly and not just “X” hours per week for the number of weeks that the task is active

Task	Team	Time to Complete	Effort
Research ROS			-
			-
			-
			-

3.2 Other resource requirements

Working on this project without the actual hardware requires Ubuntu 16.04 to be installed on our personal computers. Without each team member having a personal computer, our performance will be impacted. Without Ubuntu 16.04, we would be unable to work with ROS.

3.3 Financial requirements

We currently have all of the sensors and hardware necessary for this project. However, if we are in need of more hardware, this section will be updated.

3.4 Project Timeline

Before we start to manage a planned schedule, we have already set up three milestones to come up with our project`s result. Thus, we will make a schedule by following each milestone as a step by step.

The chart is a simple timeline of our project by this semester. The date that is represented in a chart might be changed flexibly but we are going to keep this schedule as well as there is no specific schedule error.

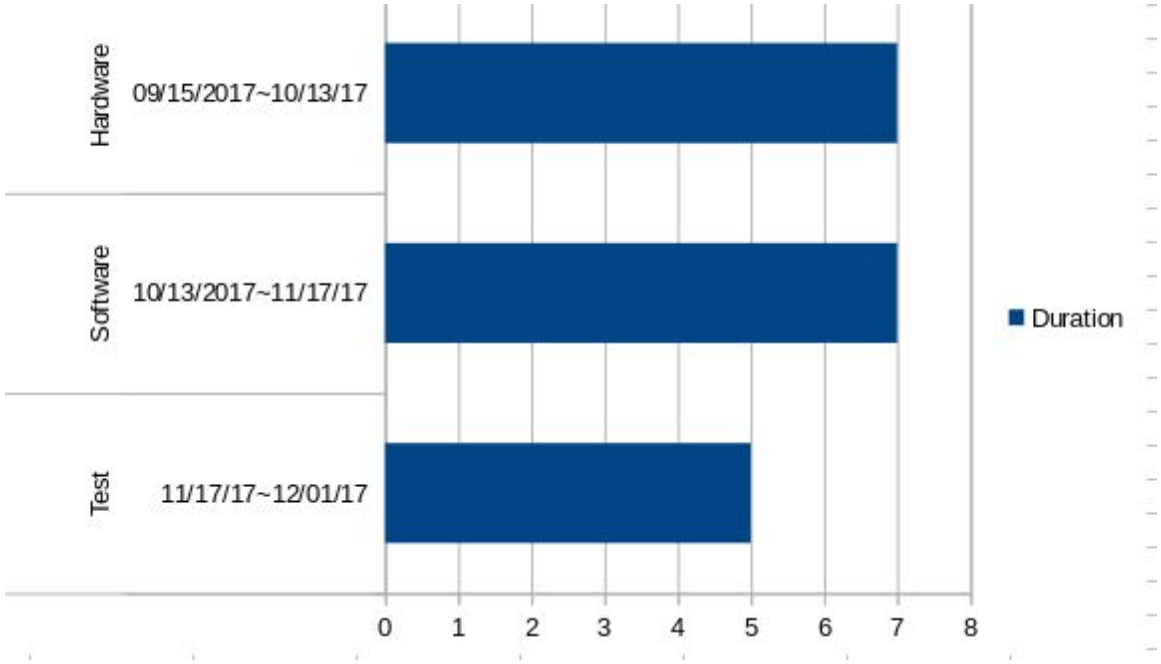

• A detailed schedule is needed as a part of the plan:

Task	Expected Schedule
Hardware	
Figure out all necessary hardware sensors such as Lidar, Radar, Camera, and GPS	
Figure out how to use ROS on Ubuntu	
Start to collect receiving data from sensors by using ROS and QPU	~ 10/13/17

Software	
Communicate between Robotics and Controls team	
Format data is given through ROS	
Control a vehicle by using data	
Figure out what errors might be	~11/17/17
Testing	
Test all parts are working as expected	
Test if it detects something in front of vehicle by sensor	
Test if it detects corner case	~12/01/17

4 Closure Materials

4.1 CONCLUSION

For the prototype, we plan on following the 3 following milestones which addresses the time frame and the requirements for each period during the semester.

Milestone 1: This is active since 9/15 and plan on working on it for 2-3 weeks until early October. During this time period, we plan on figuring out the information and requirements for all the necessary hardware. The key significance of this step is to find out how we are going to combine each hardware onto the ROS and identifying how to utilize the ROS before we actually start collecting data onto the program.

Milestone 2: This is active on early October and has a time frame of 1 month until early November. During this step, we are going to begin receiving and collecting data from the sensors. From this process, we will need solid information from both the Robotics and Controls teams and identify what their roles are so that there are no oversteps onto our parts. We will need to see how we will format the received data and see what the robotics and controls team will do with that received data. One big goal (we may or may not achieve this) is to try to use the received data to control the car. This goal will only be possible if we successfully are able to get all the hardware successfully connected and functioning. This would be a long-shot goal.

Milestone 3: This milestone is from early November to the week before Dead Week. For this milestone, we plan on finishing up on the data collecting .

Overall, our group plans to maintain the schedule listed above. One of our biggest challenges is making sure that when collecting the data from each sensor, that our ROS can use that data and then we can convert it into actual measurements. Using those measurements, we will need to find a way to make sure that any other measurements gathered by the ROS does not mix with the other sensors.

4.2 References

- https://iowastate.sharepoint.com/sites/followme/_layouts/15/guestaccess.aspx?guestaccesstoken=2r78LZdQdlEBxtbRZtiIOMEm9KbOjpWrG0gUOS04cg0%3d&docid=2_1d17f93c98c7f4f9b8ce85de091e412a5&rev=1
- https://iowastate.sharepoint.com/sites/followme/_layouts/15/guestaccess.aspx?guestaccesstoken=1nJFcwu1zNuLFNnT02jC%2bj8U1avusO0%2bNsA5IxLsKXU%3d&docid=2_1257dc5e4ad964b9996f4511f07f63e64&rev=1
- https://iowastate.sharepoint.com/sites/followme/_layouts/15/guestaccess.aspx?guestaccesstoken=Hi%2bvjY10jK%2bIeQULatcLTFDJywsNRQNdESorttZYTvg%3d&docid=2_1b5ebfbeb5dfe40079d288d159769c659&rev=1
- https://iowastate.sharepoint.com/sites/followme/_layouts/15/guestaccess.aspx?guestaccesstoken=Hi%2bvjY10jK%2bIeQULatcLTFDJywsNRQNdESorttZYTvg%3d&docid=2_1b5ebfbeb5dfe40079d288d159769c659&rev=1
- https://iowastate.sharepoint.com/sites/followme/_layouts/15/guestaccess.aspx?guestaccesstoken=j5%2bQr85XC9C1FByy7wBlib4U5bOXCjHZ7F%2fzIYZ5PgM%3d&docid=2_1bf495a30e5754983aeaf2d3e559970a2&rev=1

4.2 Appendices

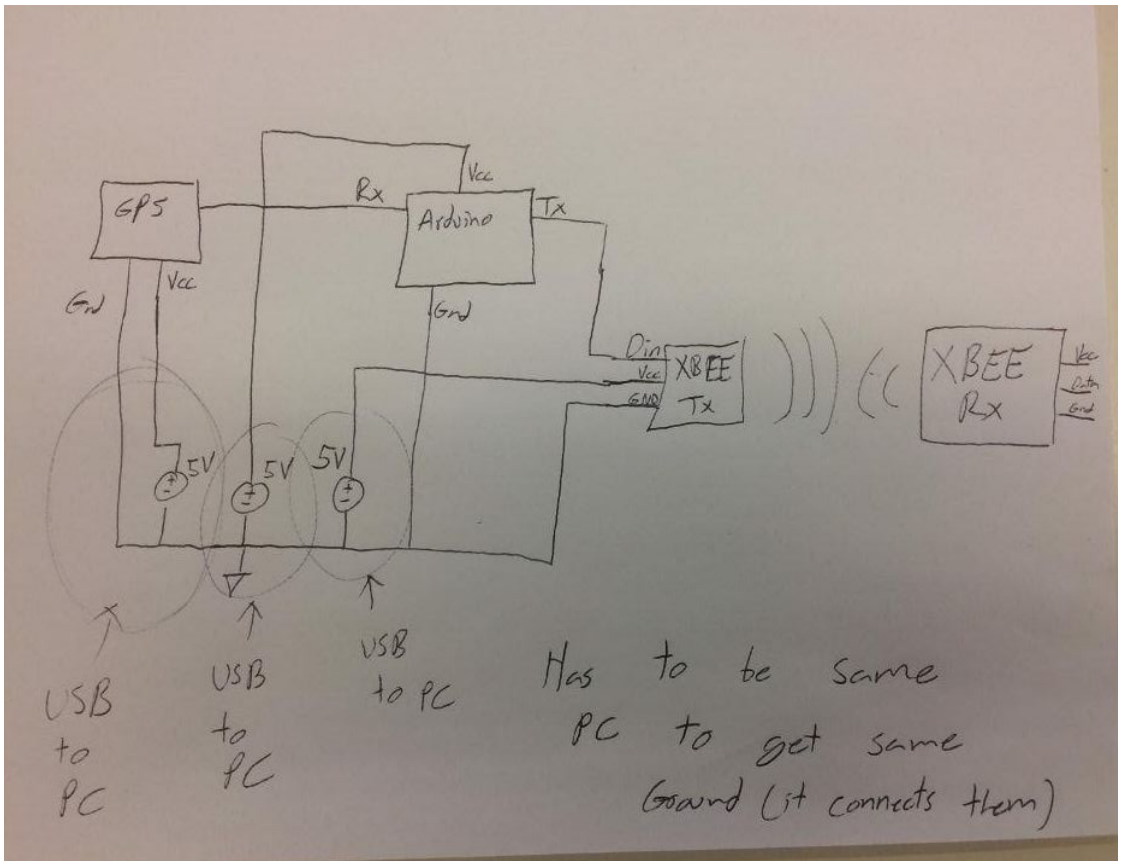

Specification	XBee	Xbee-PRO
Performance		
Indoor/Urban	100ft	300ft
Line of sight range	300ft	1 mile
Data Rate	250k bps	250k bps
Serial Interface Data Rate	1200bps-250kbps	1200bps-250kbps
Receiver Sensitivity	-92 dBm	-100 dBm
Power Requirements		
Supply Voltage	2.8-3.4V	2.8-3.4V
Transmit Current(@3.3V)	45mA	250mA
Idle Current	50mA	55mA

Power Down Current	<10uA	<10uA
Our Choice	NO	YES

Following expectations and roles

1. Built in system for a golf car with full compatibility
2. Car has a system built into it, software it crucial for having the system compatibility
3. Almost all sensor and hardware available
4. Based on the self-driving car but we are working with the sensors of it that enhance of function for its eyes and ears.
5. Focus on what components we will need for communicating vehicle to vehicle each other. << week1
6. Make sure there will be specific different role between hardware and software. << week1
7. Make best position for each group member to start senior design project. << week1
8. Based on sensor which is GPS, Lidar, Radar, and Camera, make sure how each vehicle communicate each other. << week2
9. The most important part for communicating V2V is transmitting and receiving data from lead V to follow V. << week2
10.